EXTERIOR VIEW - CLOSED

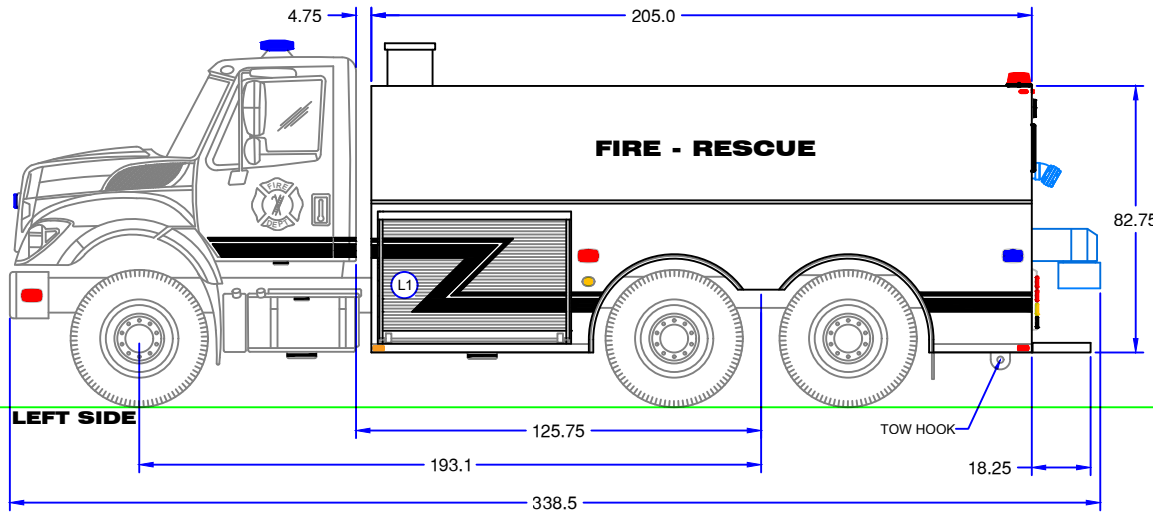

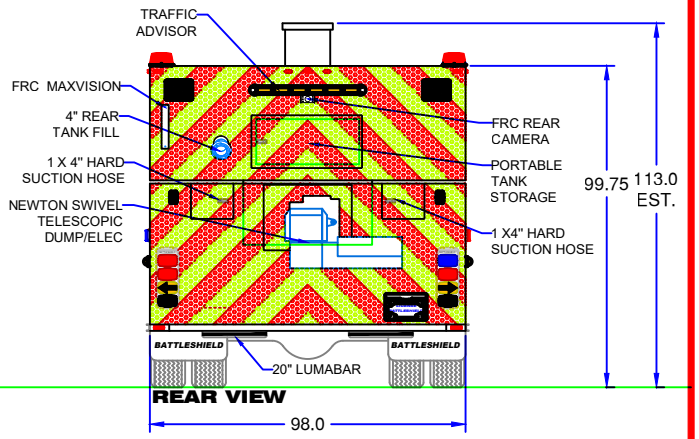

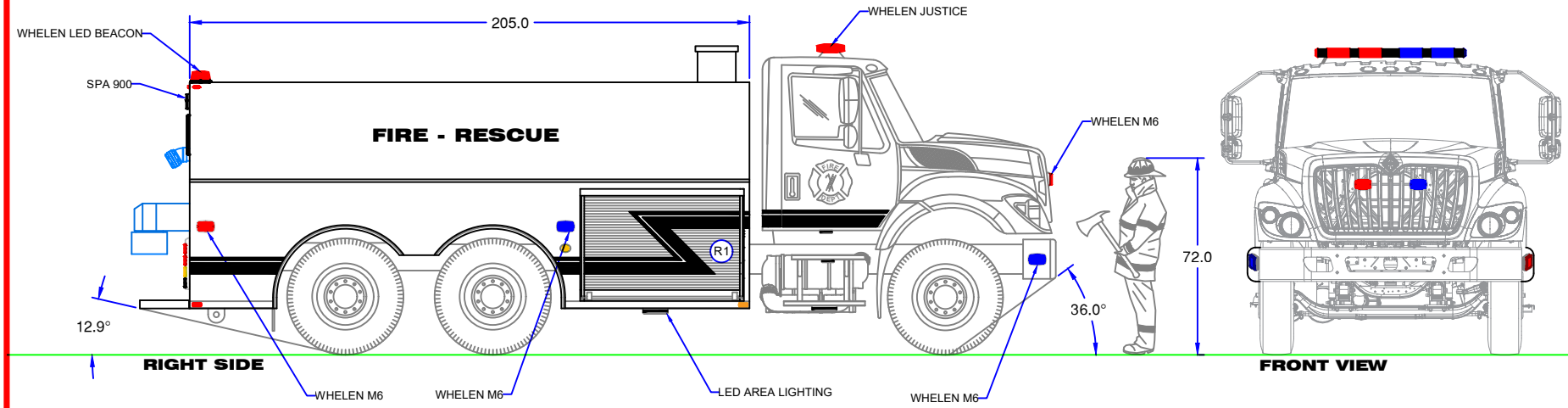

LAURENTIAN VALLEY

CAB	
CHASSIS	2021 INTERNATIONAL HV607
ENGINE	CUMMINS ISL 9 400HP @ 2200 RPM 1250 LB-FT @ 1200 RPM
TRANS	ALLISON 4000 EVS-P AUTO
FAWR	18,000 LBS
RAWR	46,000 LBS
GAWR	64,000 LBS

BODY	
BODY MAT'L	3/16" 5052-H32 MARINE GRADE ALUMINUM
CHECKER	1/8" 3003H22 ALUMINUM CHECKER PLATE
DOORS	AMDOR ROLL-UP DOOR
OPTIONS	N/A

FIRE PUMP & WATER TANK	
FIRE PUMP	PORTABLE PUMP CET PFP-27-HP
TANK	2500 IGAL POLY WET-SIDE
NOTE:	ALL TRAYS/SHELVES INCLUDED

COMPARTMENT OPENING DIMENSIONS

	WIDTH	DEPTH	HEIGHT
L1	57.0	27.8	33.0
R1	57.0	27.8	33.0

ALL DIMENSIONS IN INCHES UNLESS OTHERWISE SPECIFIED

DO NOT SCALE DRAWING

DISCLAIMER

We reserve the right to modify these dimensions to accomodate actual "as built" chassis dimensions. This was prepared using body builder reference drawings.

DRAWN A. MISTRY	DATE 17 JULY 2023
REVISED A. THOMAS	DATE 16 AUG 2023
APPROVED T. HOVEY	DATE 16 AUG 2023

BATTLESHIELD